1. **PRODUCT**

   600ml. CANADIAN LONG NECK PET- 2.86 x 9.04" Long

2. **PRODUCT CAPACITY**

   28 PER COLUMN - 72", 34 PER COLUMN - 79"

3. **SET UP GUIDE UNIVENDOR-2**

Product	CAM Position	BACK Spacer	GAGE Bar	Sold out Lever	SIDE SHIM	GAGE BAR CLIP Part No.	GAGE BAR CLIP Position	BUCKET KIT #	BOTTLE GUIDE
600 ml. Long Neck	2	9	1	389242 SHORT	1074465	1066112	1	1088104 10 Columns	1085457

Note: To properly vend 600ml Long Neck PET . The Univendor-2 must have the columns setup as illustrated.

4. **GAGE BAR CLIP SET UP.**

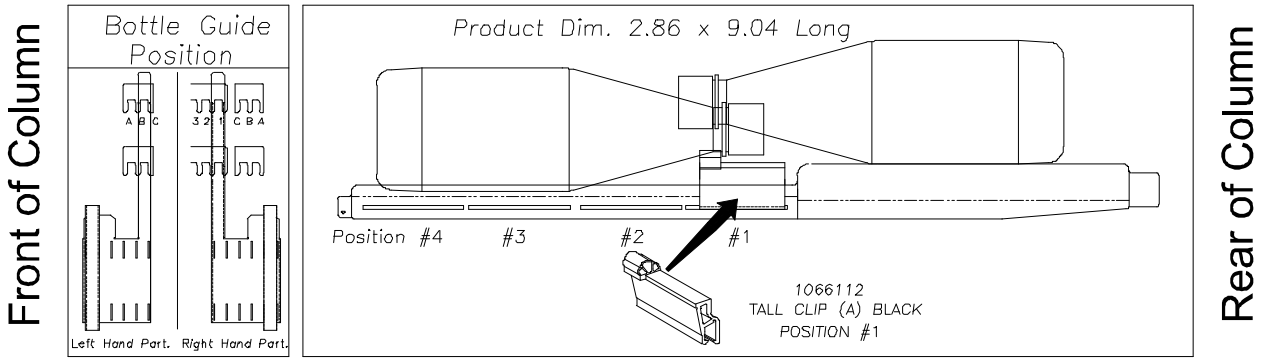

Note: Gage bar clip functioning as anti-theft device and therefore <u>must</u> be installed.

5. **SET UP GUIDE.**

Column Load
See Note # 9

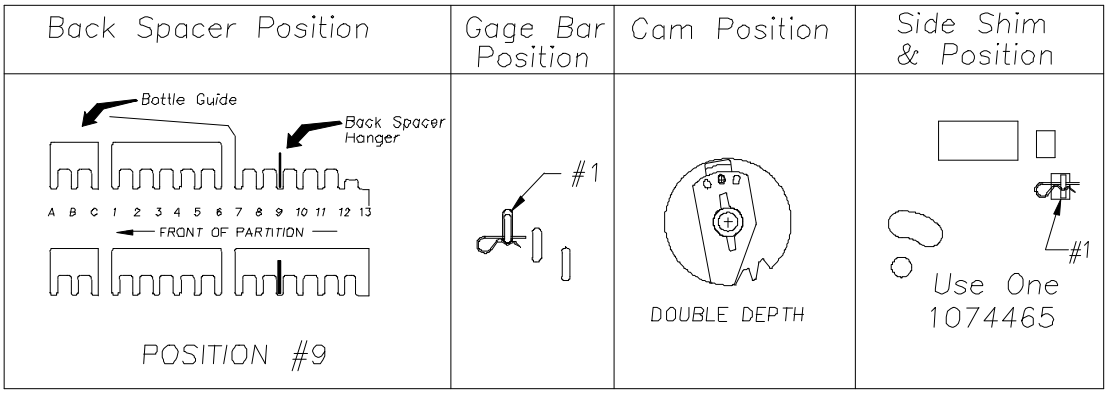

6. **Bottle Guide Position Set-Up: (requires kit #1085457) Left Hand Partition set in B & C, Right Hand Partition set in 1 & 2 position. See detail in # 4. Bottle Guide Position.**
7. **BUCKET SET- UP: (requires kit #1088104) install foam tape into buckets per installation instructions included in kit.**
8. **SOLD-OUT LEVER TO BE SHORT STYLE WITH NEW FRONT SPACER #1077457: Spring to be located on the right side (low pressure setting).**
9. **The bottles MUST be loaded as follows to avoid jams:**

   Arrange bottle caps so that the cap of the FRONT BOTTLE of each layer of 2 bottles (front & rear) is on TOP of the rear bottle-cap in that layer. For easiest loading, place rear bottle first, followed by front, then alternating rear & front until column is full, being careful to maintain the prescribed pattern.