1. PRODUCT

355 ML, PRINCE EDWARDS ISLAND COCA COLA LONG NECK - GLASS - 2.52 x 9.52 Long

2. PRODUCT CAPACITY

16 PER COLUMN - 72

3. SET UP GUIDE UNIVENDOR-2

Product	CAM POSITION	BACK SPACER	GAGE BAR	Sold out Lever	SIDE SPACER	GAGE BAR CLIP	
						Part No.	Position
355 ML Coke Lg N.	1	C	2	389242 SHORT	1060686	NONE	0

Note: To properly vend 355ml Coke Long Neck. The Uni-2 must have the columns setup correctly.

4. GAGE BAR CLIP SET UP.

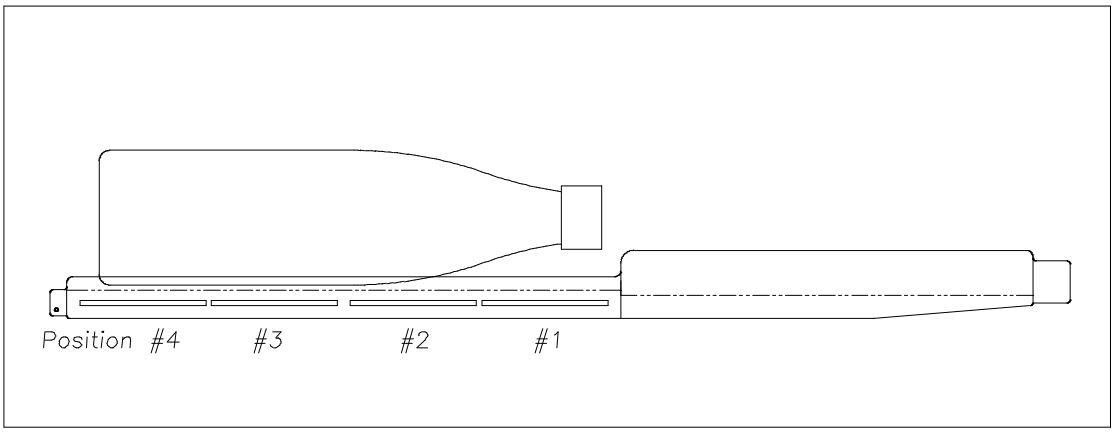

5. SET UP GUIDE.

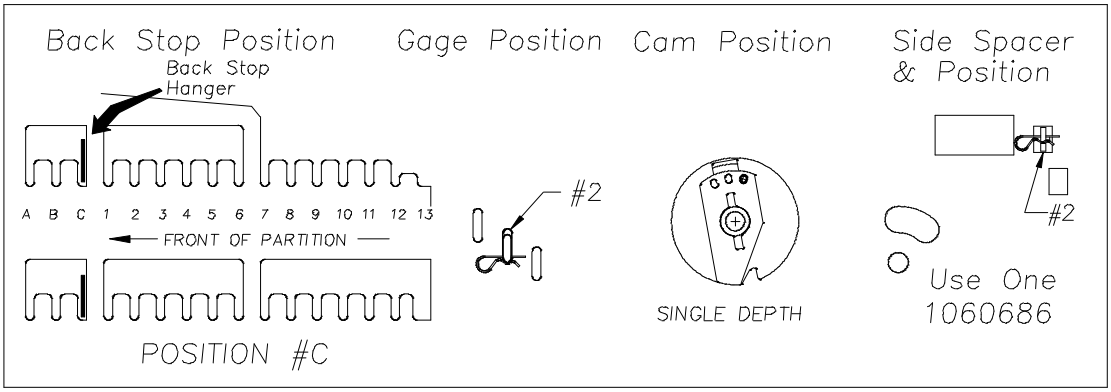

6 . SOLD-OUT LEVER TO BE SHORT STYLE WITH FRONT SPACER.
SPRING TO BE LOCATED ON THE RIGHT SIDE (LOW PRESSURE SETTING).

7. FOR OTHER PRODUCT SET UP GUIDES CONTACT VENDO COMPANY.
TEL: (209) 439-1770 FAX: (209) 439-2083.