1. **PRODUCT**

   355 ML, 12 OZ. NAYA CANADIAN WATER - PET BOTTLE - 2.41 Top x 2.43 Btm x 6.76 Long

2. **PRODUCT CAPACITY**

   34 PER COLUMN - 72", 42 PER COLUMN - 79"

3. **SET UP GUIDE UNIVENDOR-2**

Product	CAM POSITION	BACK SPACER	GAGE BAR	Sold out Lever	SIDE SPACER	GAGE BAR CLIP	
						Part No.	Position
355 ML NAYA	2	6	3	389242 SHORT	1069791	1066112-1	1

Note: To properly vend 355ML. NAYA. The Univendor-2 must have the columns setup correctly.

4. **GAGE BAR CLIP SET UP.**

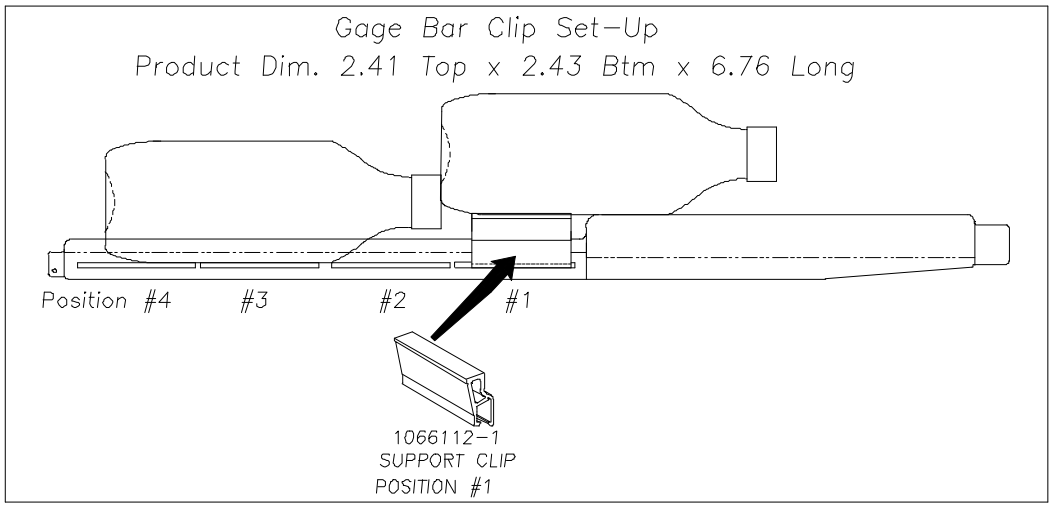

5. **SET UP GUIDE.**

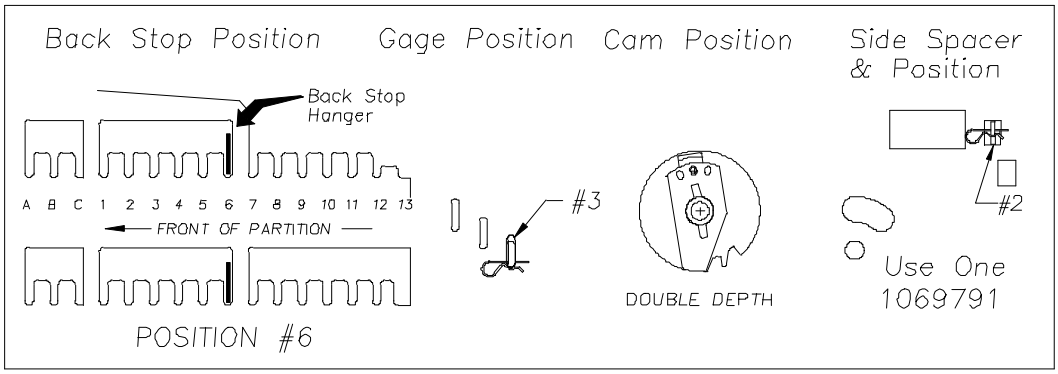

6 . **SOLD-OUT LEVER TO BE SHORT STYLE WITH FRONT SPACER.**
SPRING TO BE LOCATED ON THE RIGHT SIDE (LOW PRESSURE SETTING).