NAYA CANADIAN WATER 500 ML. P.E.T. BOTTLE

UNIVENDOR-2 PRODUCT SET-UP GUIDE

2/12/96

REV. 1/23/97

1. PRODUCT

2.41 Top x 2.43 Btm x 8.68 Long

2. PRODUCT CAPACITY

34 PER COLUMN - 72", 42 PER COLUMN - 79"

3. SET UP GUIDE

CAM POSITION	BACK SPACER	GAGE BAR	Sold out Lever	SIDE SPACER	GAGE BAR CLIP	
					Part No.	Position
2	13	3	389242 SHORT	1069791	NONE	0

4. GAGE BAR CLIP SET UP.

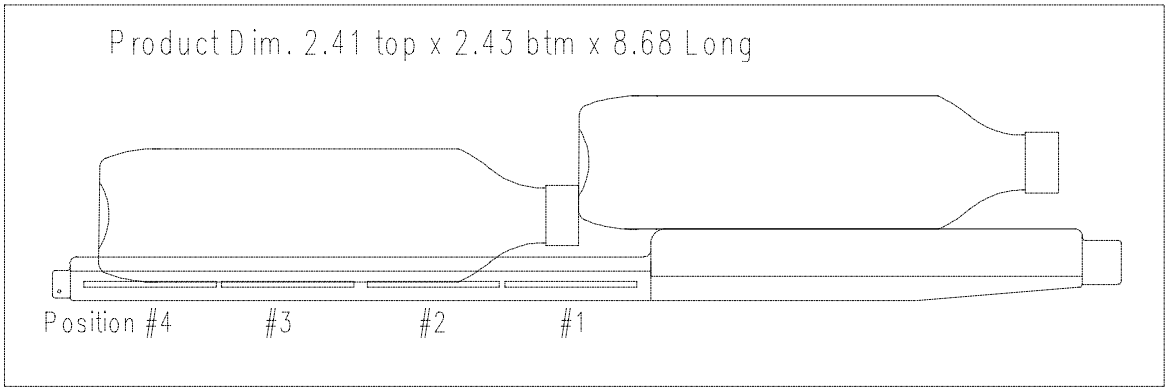

5. SET UP GUIDE.

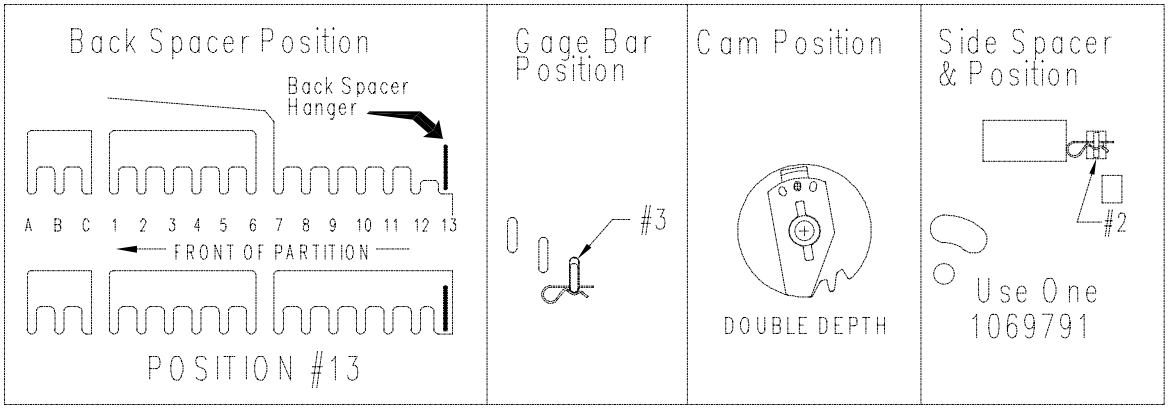

6 . SOLD-OUT LEVER TO BE SHORT STYLE WITH FRONT SPACER.
SPRING TO BE LOCATED ON THE RIGHT SIDE (LOW PRESSURE SETTING).

7. FOR OTHER PRODUCT SET UP GUIDES CONTACT THE VENDO COMPANY.
TEL: (209) 439-1770 FAX: (209) 439-2083.

NAYA CANADIAN WATER 500 ML. P.E.T. BOTTLE