1. **PRODUCT**

   600 ML AUSTRALIAN COKE CONTOUR - 2.83 x 9.35" Long

2. **PRODUCT CAPACITY**

   28 PER COLUMN - 72", 34 PER COLUMN - 79"

3. **SET UP GUIDE UNIVENDOR-2**

Product	CAM POSITION	BACK SPACER	GAGE BAR	Sold out Lever	SIDE SHIM	GAGE BAR CLIP	
						Part No.	Position
600 ML Australian	2	12	1	389242 SHORT	ONE 1066821	1066112	1

Note: To properly vend 600 ml.Coke. The Univendor-2 must have the columns setup correctly.

4. **GAGE BAR CLIP SET UP.**

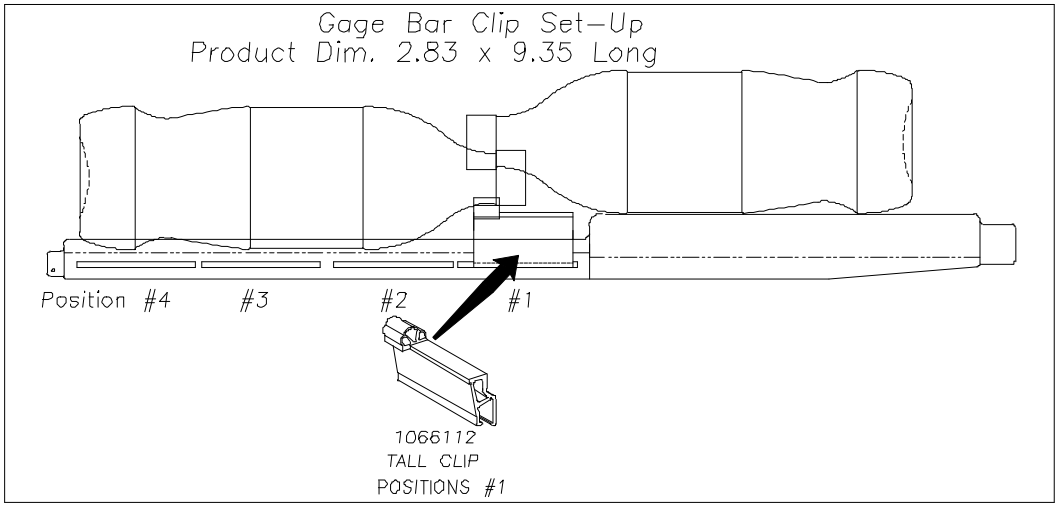

Note: Gage bar clip functioning as anti-theft device and therefore <u>must</u> be installed.

5. **SET UP GUIDE.**

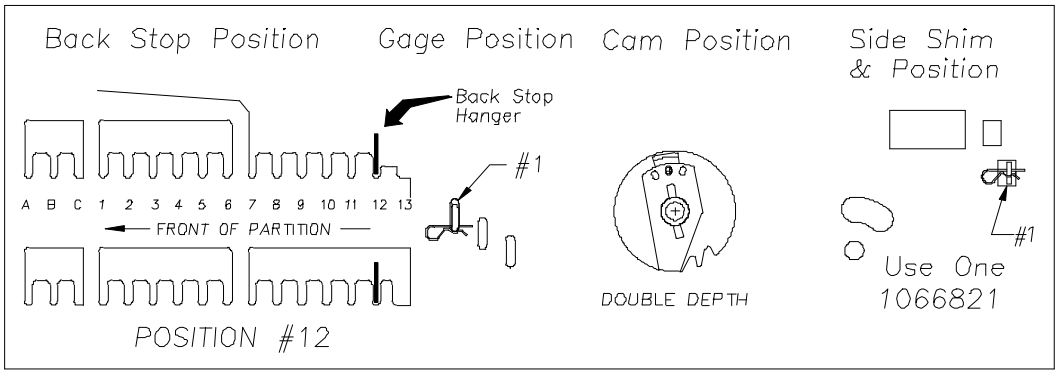

6. **SOLD-OUT LEVER TO BE SHORT STYLE WITH FRONT SPACER.**
   SPRING TO BE LOCATED ON THE RIGHT SIDE (LOW PRESSURE SETTING).